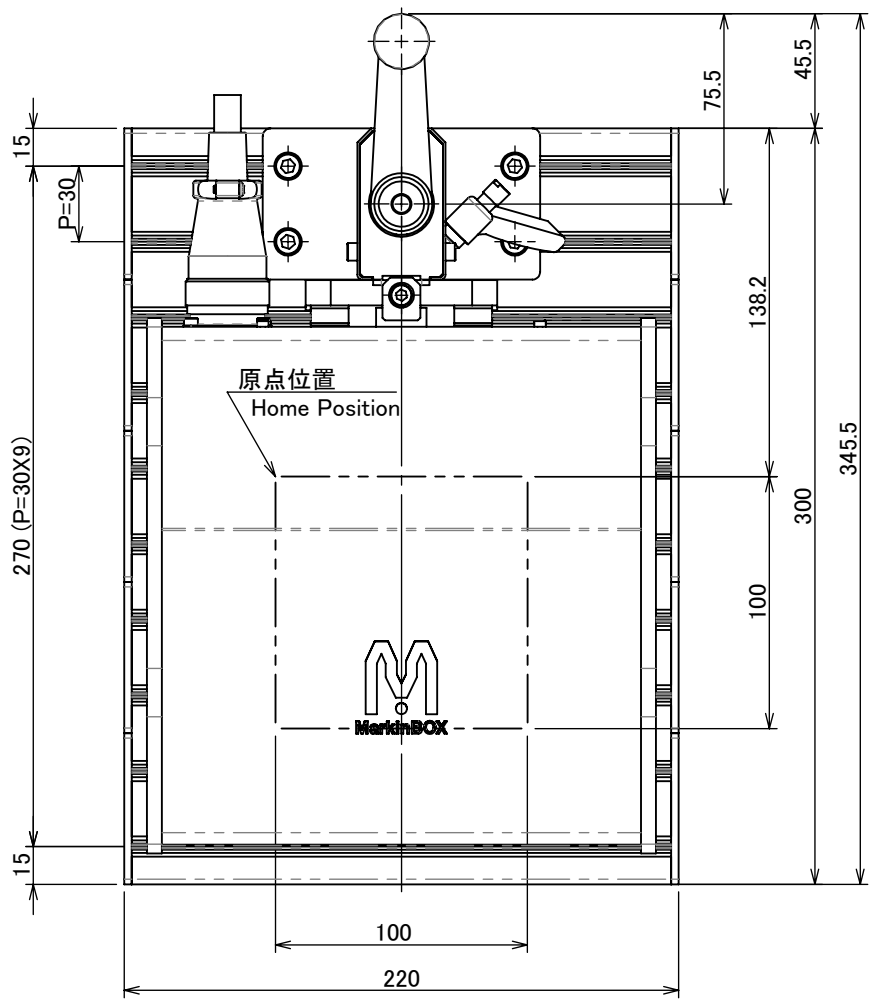

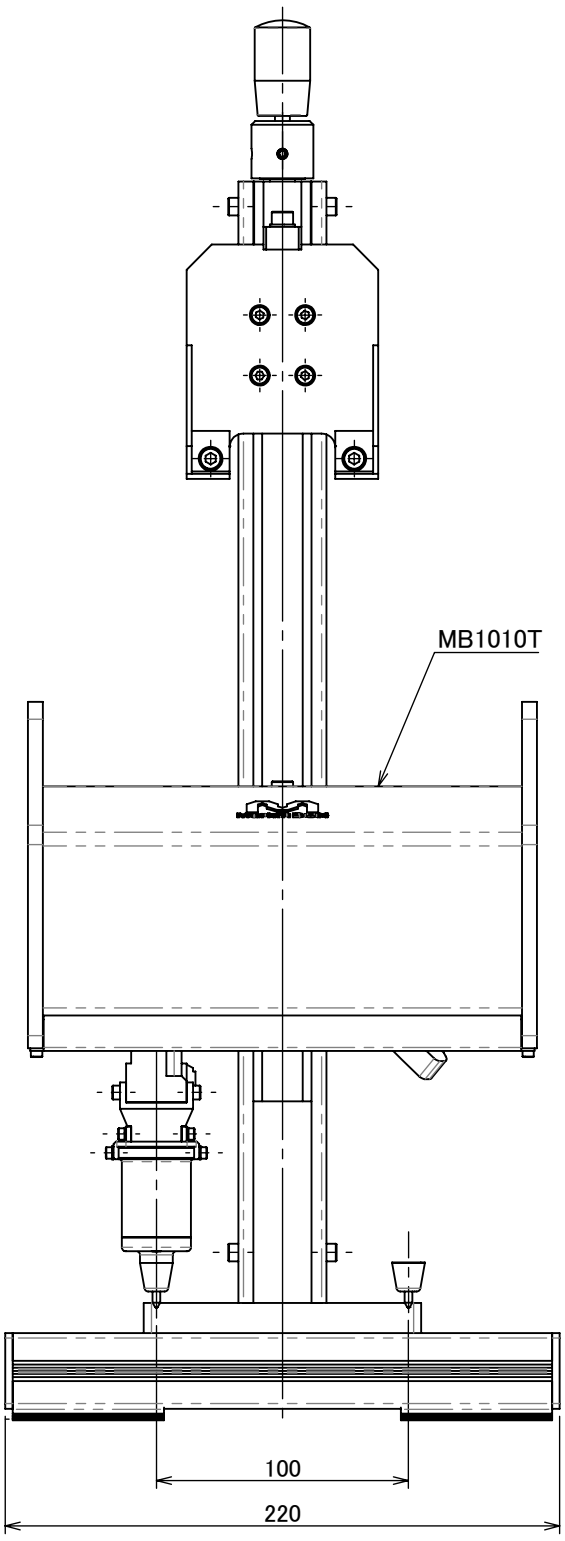

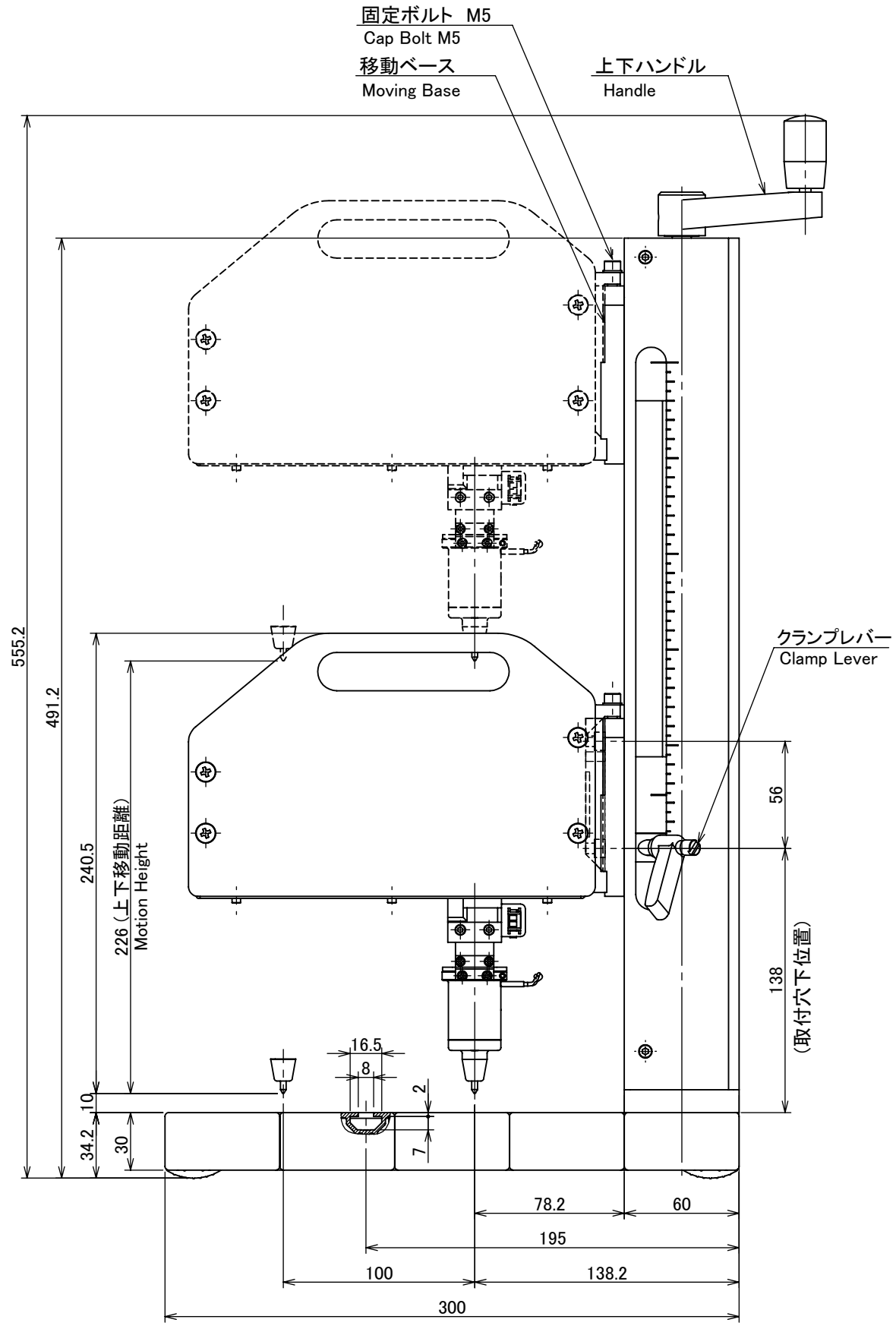

Tocho Marking Systems,Inc.	Title of Drawing	Rev.	Date	Scale
	MB1010T (with stand)	A	2024.12.19	1 : 3